Symaro™

# Immersion Temperature Sensors QAE21...

**Passive sensors for acquiring the water temperature in pipes and tanks.**

## Use

The QAE21… immersion temperature sensors are for use in ventilation and air conditioning plants for:

- Controlling or limiting the flow temperature
- Limiting the return temperature
- Controlling the DHW temperature

## Type summary

| *Type reference* | *Outfit* | *Immersion length* | *Nominal pressure* | *Sensing element* | *Degree of protection* |
|---|---|---|---|---|---|
| **QAE2110.010** | Including protection pocket with threaded nipple G ½ A | 100 mm | PN 10 | Pt 100 | IP 54 |
| **QAE2110.015** | Including protection pocket with threaded nipple G ½ A | 150 mm | PN 10 | Pt 100 | IP 54 |
| **QAE2120.010** | Including protection pocket with threaded nipple G ½ A | 100 mm | PN 10 | LG-Ni 1000 | IP 42 (IP 54) [3] |
| **QAE2120.015** | Including protection pocket with threaded nipple G ½ A | 150 mm | PN 10 | LG-Ni 1000 | IP 42 (IP 54) [3] |
| **QAE2121.010** | With clamp for protection pocket [1] | 100 mm | PN [4] | LG-Ni 1000 | IP 42 (IP 54) [3] |
| **QAE2122.013** | Including compression fitting with threaded nipple G ½ A | max. 130 mm [2] | PN 16 | LG-Ni 1000 | IP 42 (IP 54) [3] |
| **QAE2140.010** | Including protection pocket with threaded nipple G ½ A | 100 mm | PN 10 | T1 | IP 42 (IP 54) [3] |

1) Protection pocket required 2) Adjustable immersion length 3) IP 54 with cable entry gland M16 (not included as standard)
4) Depending on the type of protection pocket used

## Ordering

When ordering, please give name and type reference, e.g. :
Immersion temperature sensor **QAE2120.010** or protection pocket **ALT-SS100**

## Equipment combinations

All systems or devices capable of acquiring and handling the sensor's passive Pt 100, LG-Ni 1000 or T1 output signal.

## Function

The sensor acquires the medium temperature via its sensing element whose resistance value changes as a function of the temperature.
The signal is delivered for further handling by a suitable controller.

## Sensing elements

LG-Ni 1000 Characteristic

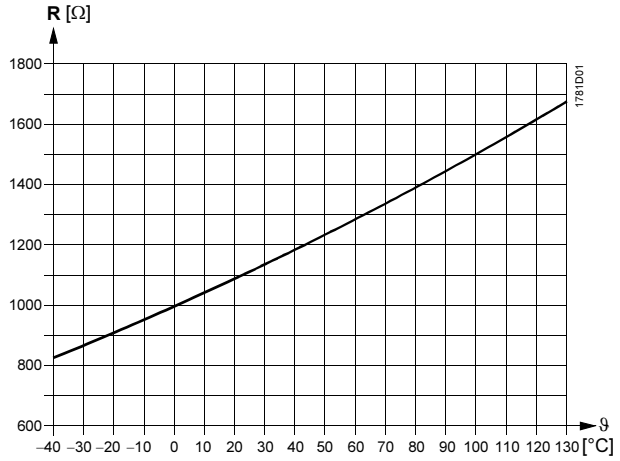


Accuracy

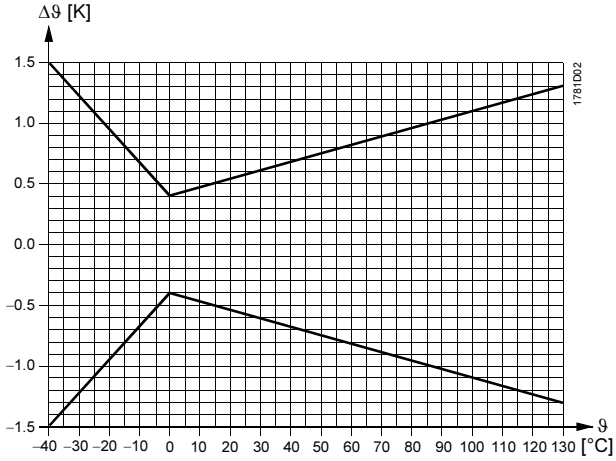


Pt 100 (class B) Characteristic

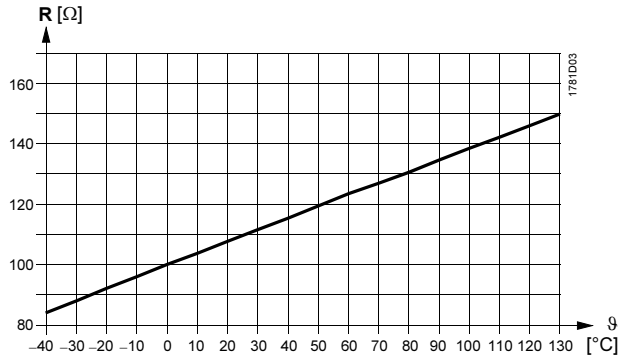


Accuracy

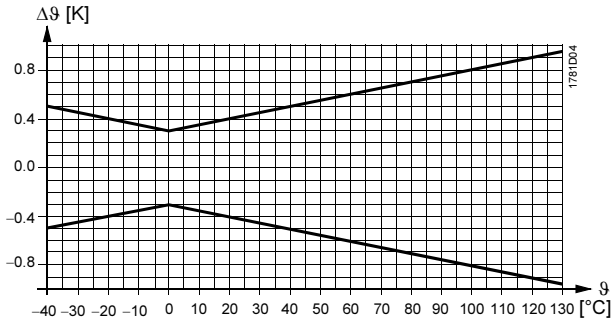

T1 (PTC) Characteristic

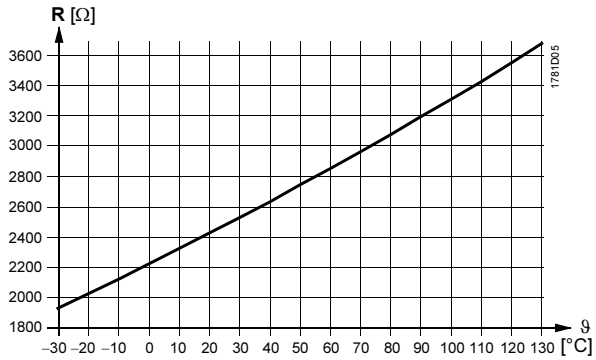


Accuracy

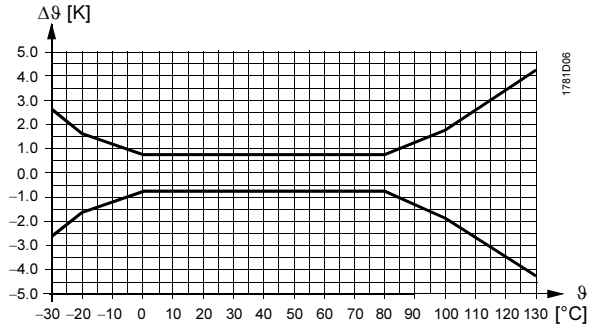


*Legend*

| | |
|---|---|
| R | Resistance value in Ohm |
| ϑ | Temperature in degrees Celsius |
| Δϑ | Temperature differential in Kelvin |

## Mechanical design

The immersion temperature sensors consist of the following components:

- Two-sectional plastic housing comprised of base with connection terminals and removable cover (snap-on design)
- Immersion rod complete with sensing element

The connection terminals can be accessed after removing the cover. With the QAE2110.010 and QAE2110.015, cable entry is made via a cable entry gland M16. With the other types of sensors, cable entry is via a grommet which, if required, can be replaced by a cable entry gland M16 (IP 54).

## Accessories (not included in standard delivery)

| *Name* | *Material* | *Nominal pressure* | *Type of sealing* | *Immersion length* | *Type reference* |
|---|---|---|---|---|---|
| Protection pocket | V4A (1.4571) | PN16 | Threaded with sealing means | 100 mm | **ALT-SS100** |
| Protection pocket | V4A (1.4571) | PN16 | Threaded with sealing means | 150 mm | **ALT-SS150** |
| Protection pocket | V4A (1.4571) | PN40 | With flange for flat seal | 100 mm | **ALT-SSF100** |
| Protection pocket | V4A (1.4571) | PN40 | With flange for flat seal | 150 mm | **ALT-SSF150** |

For other protection pocket accessories, refer to Data Sheet N1194.

## Engineering notes

If the nominal pressure exceeds PN10 or the medium temperature exceeds 130 °C, a protection pocket made of stainless steel (V4A) is required.

## Mounting and installation notes

Depending on use, the sensor should be located as follows:

- For flow temperature control:
  In the heating flow:
  – Directly after the pump if the pump is located in the flow
  – 1.5 to 2 m after the mixing valve if the pump is located in the return
- For return temperature limitation:
  In the return at a location where the temperature can be correctly acquired

The sensor should be installed in an elbow such that the immersion rod or the protection pocket faces the direction of flow. The water must be well mixed where the temperature is acquired. This is downstream from the pump or, if the pump is mounted in the return, at least 1.5 m after the mixing point.

The sensor should be mounted such that the cable does not enter from the top.

With all types of sensors, the immersion length must be a minimum of 60 mm!

The sensor must not be covered by lagging.

To fit the sensor, a threaded fitting or T-piece G ½ must be welded into the pipe.

Mounting

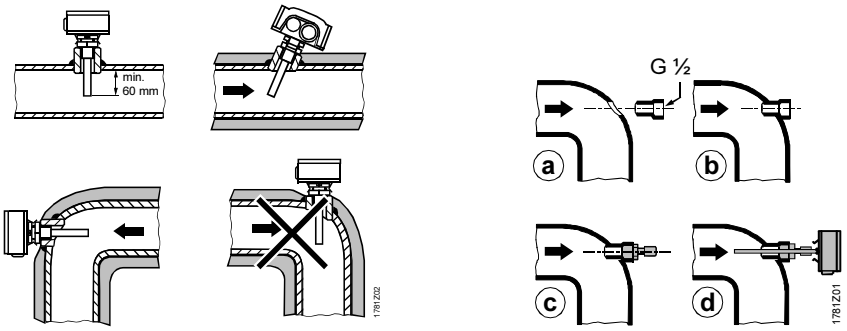


*Note!*

- For sensors with non-sealing threaded nipples G ½, sealing means must be used with the threaded connection (e.g. hemp, Teflon tape or similar)
- Tighten compression fitting of the QAE2122.0130 on the sensor's immersion rod
  – *When tightening for the first time:*
  Turn the nut about 1 ½ turns until strong resistance is felt. Then, slightly loosen the nut again and retighten ¼ turn
  – *For premounted compression fittings or repeated fitting:*
  Screw the nut on until finger-tight. Then, tighten with a spanner ¼ turn for the final fit

Mounting Instructions are printed on the packaging.

## Technical data

| | | |
|---|---|---|
| Functional data | Measuring range | −30...+130 °C |
| | Sensing element | refer to "Type summary" |
| | Time constant<br>With protection pocket<br>Without protection pocket | <br>approx. 30 s<br>approx. 8 s |
| | Measuring accuracy | refer to "Function" |
| | Immersion length | refer to "Type summary" |
| | Nominal pressure | refer to "Type summary" |
| Protective data | Degree of protection of housing | refer to "Type summary" |
| | Safety class | III to EN 60 730 |
| Electrical connections | Screw terminals for | 1 x 2.5 $mm^2$ or x 1.5 $mm^2$ |
| | Cable entry via<br>Grommet<br>Cable entry gland | <br>for 5.5...7.2 mm dia. cable<br>M 16 x 1.5 |
| | Perm. cable lengths | refer to Data Sheet of controller |
| Environmental conditions | Operation<br>Climatic condition<br>Temperature (housing)<br>Humidity (housing) | to IEC 721-3-3<br>class 3K5<br>−40...+70 °C<br>5...95 % r.h. |
| | Transport<br>Climatic condition<br>Temperature<br>Humidity<br>Mechanical environmental conditions | to EC 721-3-2<br>class 2K3<br>−25...+70 °C<br><95 % r.h.<br>class 2M2 |
| Materials and colors | Base | polycarbonate, RAL 7001 (silver-grey) |
| | Cover | polycarbonate, RAL 7035 (light-grey) |
| | Immersion rod | stainless steel to DIN 17 440, steel 1.4571 |
| | Protection pocket | brass (CuZn37) |
| | Compression fitting | stainless steel 1.4404, 1.4435, 1.4571 |
| | Cable entry gland M 16 x 1.5 | PA, RAL 7035 (light-grey) |
| | Packaging | corrugated cardboard |
| Weight | Incl. packaging<br>QAE2110.010<br>QAE2110.015<br>QAE2120.010<br>QAE2120.015<br>QAE2121.010<br>QAE2122.013<br>QAE2140.010 | <br>approx. 0.21 kg<br>approx. 0.23 kg<br>approx. 0.21 kg<br>approx. 0.23 kg<br>approx. 0.13 kg<br>approx. 0.19 kg<br>approx. 0.21 kg |

## Internal diagram

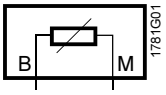


The internal diagram is identical for all types of immersion temperature sensors covered by this Data Sheet.
The connecting wires are interchangeable.

## Dimensions (in mm)

**QAE2110.010**
**QAE2110.015**
**QAE2120.010**
**QAE2120.015**
**QAE2140.010**

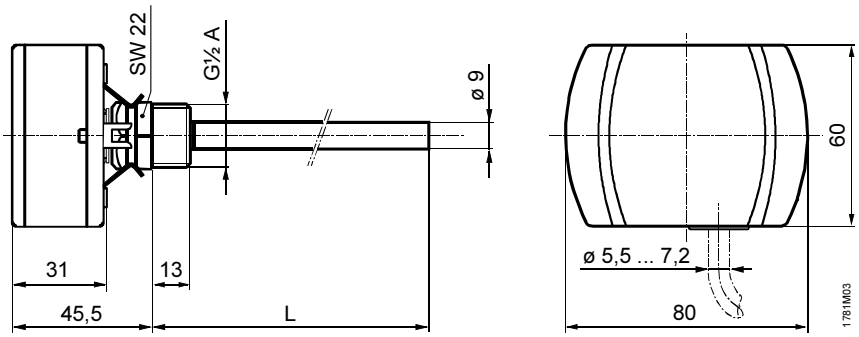


| Typ | L |
|---|---|
| QAE2110.010 | 100 mm |
| QAE2110.015 | 150 mm |
| QAE2120.010 | 100 mm |
| QAE2120.015 | 150 mm |
| QAE2140.010 | 100 mm |

**QAE2121.010**

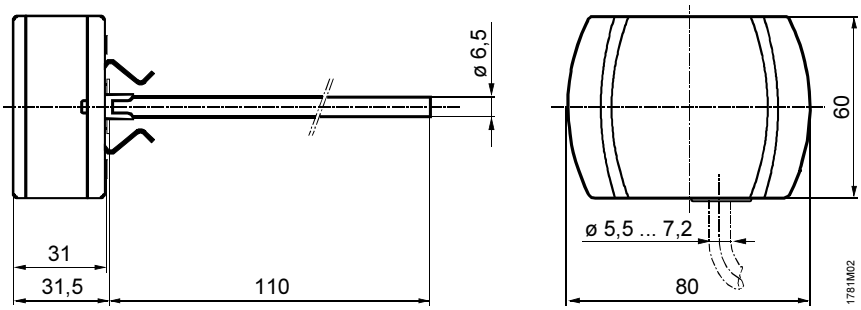


**QAE2122.013**

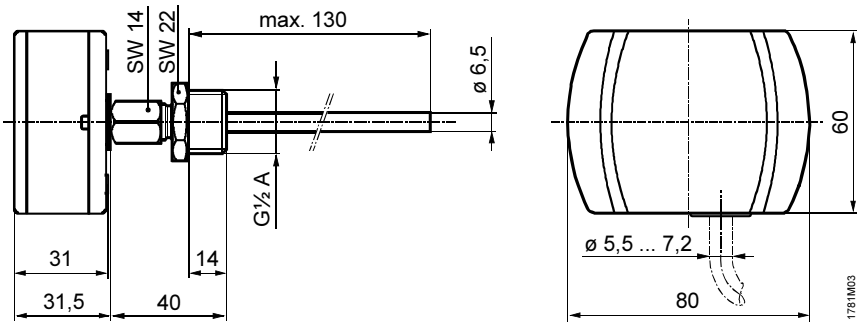



© 2004 Siemens Building Technologies AG